PRESSURE CONNECTIONS CORP.

Your Quality Connection

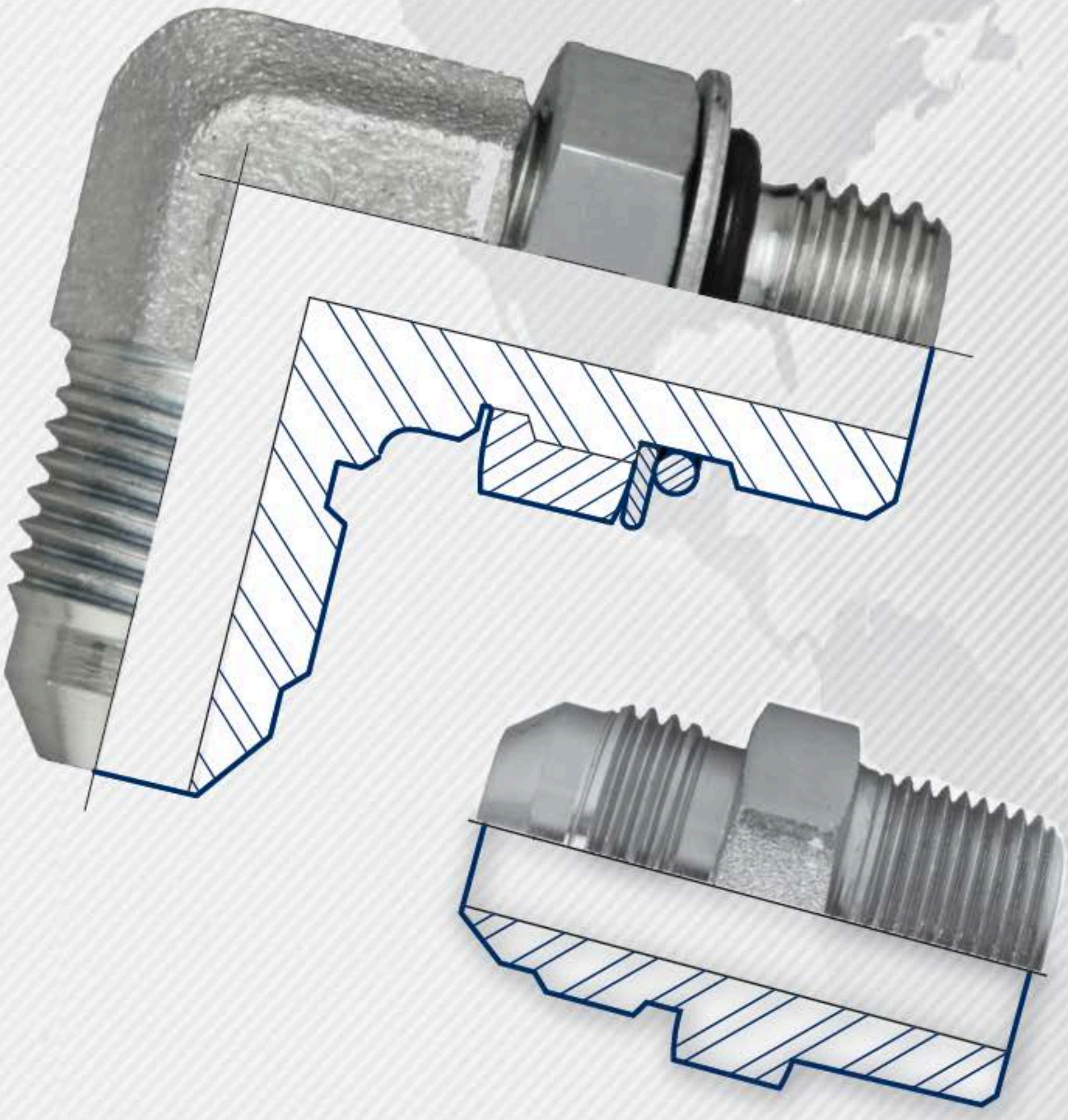

Steel Tube Fittings & Adaptors

Who We Serve

Agriculture
Automotive
Bus & RV
Construction
Forestry
Grounds & Building Maintenance
Industrial
Machine Tool
Material Handling
Marine

PRESSURE CONNECTIONS CORP.

Your Quality Connection

Pressure Connections is proud to serve customers in a broad range of industries such as: construction, agriculture, lawn and garden, mining, and truck trailer/body manufacturing.

Mining
Oil Field Service
Paving & Road Maintenance
Personal Lift Equipment
Pressure Washing
Railroad
Transportation
Utility Equipment
Waste & Refuse

Custom Kits

1

2

3

Customize Your Kit

Decide what goes into your kit based on the needs of your project.

Bagged & Barcoded

Your kit components are bagged individually by part number, making it easy for you to find and use the parts you need, when you need them!

Boxed & Labeled

Next, we ship your complete kit to you efficiently packaged to your requirements.

What Are The Benefits of Using Kits?

- Streamline the purchasing process
- Produce less paperwork
- Makes installations easy
- Cut down your purchasing time
- Order one line item instead of multiple
- Organize and increase your control over inventory
- Reduce both manufacturing time and assembly time

Call us today and we'll work with you to create a custom solution

Our trained Quality Assurance Personnel follow a rigid inspection program to ensure that our fittings meet or surpass the strictest requirements of SAE.

Quality Assurance Lab

We design our products to the strictest requirements of SAE, and improve our designs as we solve problems or reflect the latest changes in SAE design. We can also design custom fittings to fit your needs.

Engineering

Optical Comparator

Pressure Test Stand

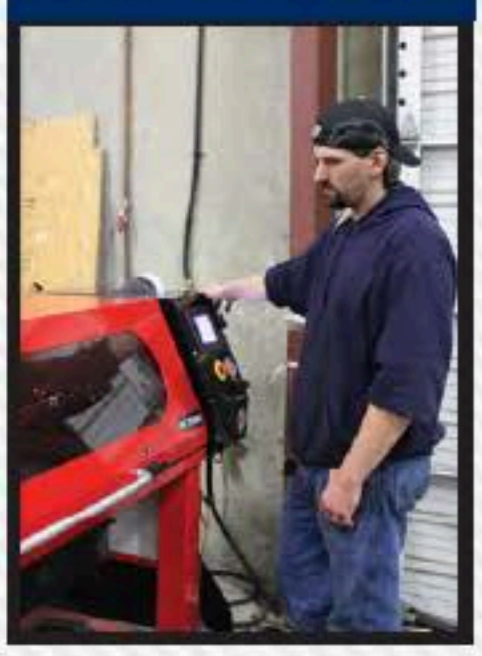

Precision Instruments

Our Glastonbury Southern Gage trained personnel use only certified instrumentation and equipment in the quality process giving you leak free performance.

All equipment is calibrated at regularly scheduled intervals. Records and instrument serial numbers are kept on file to guarantee the accuracy of every inspection.

ISO 9001:2008*
Audit

*"The Corrective Preventive Action program you've setup at Pressure Connections is top notch. **It is one of the best I've seen."***

ISO Auditor
W.J. Davis
Quality Assurance Systems Inc.

Coordinate Measuring Machine (CMM)

Only a CMM can verify that an OFS groove is manufactured to exact SAE J1453 specifications. We use a state-of-the-art CMM to measure the latest OFS "dovetail" and standard OFS groove designs.

"How can an OFS fitting leak?"

The Answer: Grooves that are too small or too large don't apply the correct pressure on the O-ring to seal properly.

Quality Symbol

* ISO 9001:2015 Pending Summer 2018

Reference Key

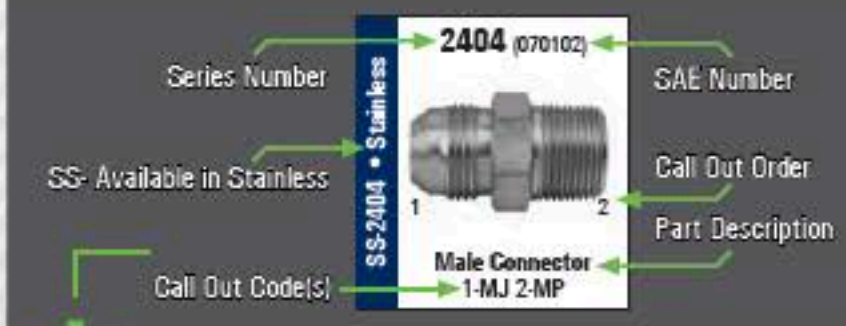

EXAMPLE PART NUMBER:

FS-6801LL-08-08-4-VBRN

Call Out Codes

BH MJ	Bulkhead JIC	FOFX	Female OFS Swivel
BH OFS	Bulkhead OFS	FPX	Female Pipe Swivel (NPSM)
FB	Female O-Ring Boss	FP	Female Pipe
FFX	Female Flareless Swivel	HS	Hose Barb or End
FH61	Code 61 Flange Head	MB	Male O-Ring Boss
FH62	Code 62 Flange Head	MJ	Male JIC Flare
FJ	Female JIC Flare	MP	Male Pipe
FJX	Female JIC Swivel	MPX	Male Pipe Swivel
FL	Flareless	OFS	O-Ring Face Seal

Prefix Options

9-	Aluminum
35-	Assembled JIC
45-	Assembled Convert-A-Flare
C-	Flareless
FS-	O-Ring Face Seal
GP-	GagePort
SS-	Stainless Steel

Series Options

BT	Bent Tube
L	Long (Single Long)
LL	Double Long (Extra Long)
LLL	Triple Long (Double Extra Long)
LN	Bulkhead Locknut
R	Restrictor

Part Options

-4	Forged Body
-V	Viton®
-VBRN	Brown Viton®
-X	Dual Chamfer

® - Registered Trademark of DuPont

Size Chart

	-02 (1/8")	-03 (3/16")	-04 (1/4")	-05 (5/16")	-06 (3/8")	-08 (1/2")	-10 (5/8")	-12 (3/4")	-14 (7/8")	-16 (1")	-20 (1 1/4")	-24 (1 1/2")	-32 (2")
CODE 61 (DIA.)	—	—	—	—	—	1 3/16"	—	1 1/2"	—	1 3/4"	2"	2 3/8"	2 13/16"
CODE 62 (DIA.)	—	—	—	—	—	—	—	1 5/8"	—	1 7/8"	2 1/8"	2 1/2"	3 1/8"
FLARELESS	5/16 - 24	3/8 - 24	7/16 - 20	1/2 - 20	9/16 - 18	3/4 - 16	7/8 - 14	1 1/16 - 12	1 3/16 - 12	1 5/16 - 12	1 5/8 - 12	1 7/8 - 12	2 1/2 - 12
JIC	5/16 - 24	3/8 - 24	7/16 - 20	1/2 - 20	9/16 - 18	3/4 - 16	7/8 - 14	1 1/16 - 12	1 3/16 - 12	1 5/16 - 12	1 5/8 - 12	1 7/8 - 12	2 1/2 - 12
NPSM	1/8 - 27	—	1/4 - 18	—	3/8 - 18	1/2 - 14	—	3/4 -14	—	1 - 11 1/2	1 1/4 - 11 1/2	1 1/2 - 11 1/2	2 - 11 1/2
OFS	—	—	9/16 - 18	—	11/16 - 16	13/16 - 16	1 - 14	1 3/16 - 12	—	1 7/16 - 12	1 11/16 - 12	2 - 12	—
ORB	5/16 - 24	3/8 - 24	7/16 - 20	1/2 - 20	9/16 - 18	3/4 - 16	7/8 - 14	1 1/16 - 12	1 3/16 - 12	1 5/16 - 12	1 5/8 - 12	1 7/8 - 12	2 1/2 - 12
PIPE	1/8 - 27	—	1/4 - 18	—	3/8 - 18	1/2 - 14	—	3/4 -14	—	1 - 11 1/2	1 1/4 - 11 1/2	1 1/2 - 11 1/2	2 - 11 1/2

Nuts, Sleeves and Steel Tubing

302

Short Flare Nut
(No sleeve required)

304 (070111)

Long Flare Nut
(No sleeve required)

SS-304C • Stainless

304C (070112)

Tube Cap
1-FJ

SS-306 • Stainless

306 (070118)

Bulkhead Locknut
(Use with #2700)

SS-318 • Stainless

318 (070110)

Tube Nut
(Use with #319)

SS-319 • Stainless

319 (070115)

Tube Sleeve
(Use with #318)

418

Convert-A-Flare Nut
(Use with #419)

419

Convert-A-Flare Sleeve
(Use with #418)

Stainless Steel

Steel Tubing

Convert-A-Flare nut & ferrule design (418/419) allows you to convert **any male 37°JIC fitting into a flareless tube fitting**. Assembly is simplified as no special tools or flaring tools are needed.

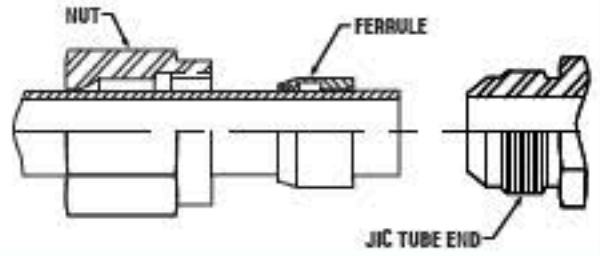

Female Pipe Swivels

SS-1404 • Stainless

1404 (140130)

MP x NPSM Adaptor
1-MP 2-FPX

1404R

Restrictor
MP x NPSM Adaptor
1-MP 2-FPX

SS-1405 • Stainless

1405 (140131)

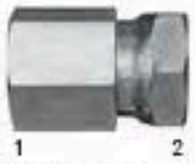

FP x NPSM Adaptor
1-FP 2-FPX

SS-1501 • Stainless

1501 (140230)

MP x NPSM Elbow
1-MP 2-FPX

1501L

MP x NPSM Elbow Long
1-MP 2-FPX

1501R

Restrictor
MP x NPSM Elbow
1-MP 2-FPX

SS-1502 • Stainless

1502 (140231)

FP x NPSM Elbow
1-FP 2-FPX

SS-1503 • Stainless

1503 (140330)

MP x NPSM Elbow
1-MP 2-FPX

1504 (140331)

FP x NPSM Elbow
1-FP 2-FPX

1601

MP x NPSM Branch Tee
1-MP 2-FPX 3-FPX

1602

FP x NPSM Branch Tee
1-FP 2-FPX 3-FPX

1603

NPSM Pipe Tee
1-FPX 2-FPX 3-FPX

6900 (140157)

MB x NPSM Adaptor
1-MB 2-FPX

6901 (140257)

MB x NPSM Elbow
1-MB 2-FPX

6902 (140357)

MB x NPSM Elbow
1-MB 2-FPX

Our Cold Headed Nuts Have Never Cracked

Pipe Fittings

SS-5000 • Stainless

5000 (140138)

Pipe Coupling
1-FP 2-FP

SS-5404 • Stainless

5404 (140137)

Hex Pipe Nipple
1-MP 2-MP

5404-X (140137)

Dual Chamfer
Hex Pipe Nipple
1-MP 2-MP

SS-5404N • Stainless

5404N

Seamless Pipe Nipple
1-MP (Both) 2-LENGTH

SS-5405 • Stainless

5405 (140139)

Increase & Extension
Connector 1-MP 2-FP

SS-5406 • Stainless

5406 (140140)

Reducer Bushing
1-MP 2-FP

5406C

Female Pipe Cap
1-FP

SS-5406P • Stainless

5406P (130109E)

Hex Head Pipe Plug
1-MP

SS-5407 • Stainless

5407 (130109A)

Square Head Pipe
Plug 1-MP

5408 (130109G)

Square Socket Pipe Plug
1-MP

SS-5408 • Stainless

5409 (130109N)

Hex Socket Pipe Plug
1-MP

9-5409

Aluminum
Hex Socket Pipe Plug
1-MP

5410

Flush Seal Pipe Plug
1-MP 7/8" Taper

SS-5500 • Stainless

5500

Male Pipe Elbow
1-MP 2-MP

5501

Male Pipe Elbow
1-MP 2-MP

SS-5502 • Stainless

5502 (140239)

Street Elbow
1-MP 2-FP

SS-5502C • Stainless

5502C

Compact
Street "Dot" Ell
1-MP 2-FP

SS-5503 • Stainless

5503 (140339)

Street Elbow
1-MP 2-FP

SS-5504 • Stainless

5504 (140238)

Female Pipe Elbow
1-FP 2-FP

SS-5505 • Stainless

5505 (140338)

Female Pipe Elbow
1-FP 2-FP

SS-5600 • Stainless

5600

Male Pipe Tee
1-MP 2-MP 3-MP

5601

Female Pipe Branch Tee
1-MP 2-MP 3-FP

SS-5602 • Stainless

5602 (140424)

Street Tee
1-MP 2-FP 3-FP

5603

Female Pipe Run Tee
1-MP 2-FP 3-MP

SS-5604 • Stainless

5604 (140425)

Male Pipe Branch Tee
1-FP 2-FP 3-MP

SS-5605 • Stainless

5605 (140438)

Female Pipe Tee
1-FP 2-FP 3-FP

5652

Female Pipe Cross
1, 2, 3, 4-FP

O-Ring Boss Fittings

SS-6400 • Stainless

6400 (070120)

Straight
Thread Connector
1-MJ 2-MB

6400L (071720)

Straight
Thread Connector Long
1-MJ 2-MB

6400R

Straight Thread
Connector 1-MJ 2-MB

SS-6401 • Stainless

6401

Male ORB x Male Pipe
1-MB 2-MP

SS-6402 • Stainless

6402 (140230)

Swivel Nut Adapter
1-MB 2-FJX

6404

Female ORB x Male Pipe
1-FB 2-MP

SS-6405 • Stainless

6405

Male ORB x Female
Pipe 1-MB 2-FP

SS-6407 • Stainless

6407

Adjustable
Male ORB Union
1-MB 2-MB

SS-6408 • Stainless

6408 (090108A)

Hex Head ORB Plug
1-MB (Buna-N)

SS-6409 • Stainless

6409 (090108B)

Hex Socket ORB Plug
1-MB (Buna-N)

SS-6410 • Stainless

6410

ORB Reducer-
Expander 1-MB 2-FB

6420

Female ORB x Female Pipe
1-FB 2-FP

6425

Female ORB Union
1-FB 2-FB

SS-6801 • Stainless

6801 (070220)

Straight Thread
Elbow 1-MJ 2-MB

6801L (071520)

Elbow Long
1-MJ 2-MB

6801LL (071620)

Elbow Double Long
1-MJ 2-MB

6801R

Str Thd Elbow Restrictor
1-MJ 2-MB

SS-6802 • Stainless

6802 (070320)

Straight Thread
Elbow 1-MJ 2-MB

SS-6803 • Stainless

6803 (070429)

ORB Branch Tee
1-MJ 2-MJ 3-MB

SS-6804 • Stainless

6804 (070428)

ORB Run Tee
1-MJ 2-MB 3-MJ

6805

ORB Female Elbow
1-MB 2-FP

6806

ORB Male Elbow
1-MB 2-MP

6807

ORB Union Elbow
1-MB 2-MB

6809

Swivel Nut Elbow
1-MB 2-FJX

6815

Straight Thread Elbow
1-MB 2-FB

6900 (140157)

MB x NPSM Adapter
1-MB 2-FPX

6901 (140257)

MB x NPSM Elbow
1-MB 2-FPX

6902 (140357)

MB x NPSM Elbow
1-MB 2-FPX

Product Lines

Hose & Fittings

Steel

Stainless

Live Swivels

Push-To-Connect

QD Couplin

Female JIC Swivels

SS-6500 • Stainless

6500 (070221)

Swivel Nut Elbow
1-MJ 2-FJX

6500BT

Bent Tube Elbow
1-MJ 2-FJX

6500BTL

Bent Tube Elbow Long
1-MJ 2-FJX

SS-6501 • Stainless

6501

Swivel Nut Adapter
1-MP 2-FJX

SS-6502 • Stainless

6502 (070321)

Swivel Nut Elbow
1-MJ 2-FJX

6502BT

Bent Tube Elbow
1-MJ 2-FJX

6503

Swivel Nut Elbow
1-FP 2-FJX

6504

Swivel Nut Connector
1-MJ 2-FJX

SS-6505 • Stainless

6505

Swivel Nut Adapter
1-MP 2-FJX

SS-6506 • Stainless

6506

Swivel Nut Adapter
1-FP 2-FJX

SS-6565 • Stainless

6565

Female JIC Swivel Union 1-FJX 2-FJX

SS-6600 • Stainless

6600 (070433)

Swivel Nut Branch Tee 1-MJ 2-MJ 3-FJX

SS-6602 • Stainless

6602 (070432)

Swivel Nut Run Tee
1-MJ 2-FJX 3-MJ

Our Cold Headed Nuts Have Never Cracked

O-Ring Face Seal Fittings

FS-304C (520112)

OFS Cap
1-FOFX

FS-306 (520118)

OFS Bulkhead Locknut
(Use with #FS-2700)

FS-318 (520110)

OFS Nut
(Use with #FS-319)

FS-319 (520115)

OFS Braze Sleeve
(Use with #FS-318)

FS-2403

OFS Tube Union
1-OFS 2-OFS

FS-2404

OFS Male Pipe Connector
1-OFS 2-MP

FS-2406 (520123)

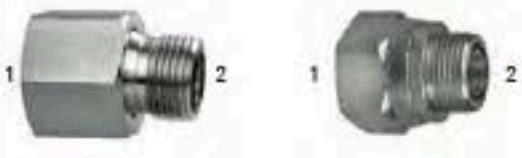

"OFS Nut Style" OFS Tube Reducer 1-FOFX 2-OFS "Crimp Style"

FS-2408 (520109)

OFS Plug
1-OFS

FS-2500 (520201)

OFS Union Elbow
1-OFS 2-OFS

FS-2501

OFS Male Elbow
1-OFS 2-MP

FS-2503

OFS Male Elbow
1-OFS 2-MP

FS-2601

OFS Male Run Tee
1-OFS 2-OFS 3-MP

FS-2603 (520401)

OFS Union Tee
1-OFS 2-OFS 3-OFS

FS-2650 (520501)

OFS Union Cross
1, 2, 3, 4-OFS

FS-2700 (520801)

OFS Bulkhead Union
1-OFS 2-BH OFS

FS-2700LN (520601)

OFS Bulhead Union
& Locknut
1-OFS 2-BH OFS

FS-2701 (520701)

OFS
Bulkhead Union Elbow
1-OFS 2-BH OFS

FS-2701LN (520701)

OFS Bulkhead Union
Elbow & Locknut
1-OFS 2-BH OFS

FS-2702 (520801)

OFS
Bulkhead Union Elbow
1-OFS 2-BH OFS

FS-2702LN (520801)

OFS Bulkhead Union
Elbow & Locknut
1-OFS 2-BH OFS

All of our OFS Bulkhead Fittings are available with a Locknut (FS-306) assembled on the body, just add suffix "LN" to the series number.

FS-2704 (520858)

OFS Bulkhead Run Tee
1-OFS 2-BH OFS 3-OFS

FS-2704LN (520858)

OFS Bulkhead Run Tee
& Locknut
1-OFS 2-BH OFS 3-OFS

FS-6400 (520120)

OFS Straight
Thread Connector
1-OFS 2-MB

FS-6402

Male OFS x
Female JIC Swivel
1-OFS 2-FJX

FS-6412 (520181)

Female OFS
Swivel x Male ORB
1-FOFX 2-MB

FS-6500 (520221)

OFS Swivel Nut Elbow
1-OFS 2-FOFX

FS-6502

OFS Swivel Nut Elbow
1-OFS 2-FOFX

FS-6600 (520433)

OFS Swivel
Nut Branch Tee
1-OFS 2-OFS 3-FOFX

FS-6602 (520432)

OFS Swivel Nut Run Tee
1-OFS 2-FOFX 3-OFS

FS-6801 (520220)

OFS
Straight Thread Elbow
1-OFS 2-MB

FS-6802 (520320)

OFS
Straight Thread Elbow
1-OFS 2-MB

FS-6803 (520429)

OFS Straight
Thread Branch Tee
1-OFS 2-OFS 3-MB

FS-6804 (520428)

OFS Straight
Thread Run Tee
1-OFS 2-MB 3-OFS

FS-6809 (520281)

OFS
Swivel Nut Elbow
1-FOFX 2-MB

FS-7403

Male OFS x Male JIC
1-OFS 2-MJ

FS-7504

Female OFS
Swivel x Male JIC
1-FOFX 2-MJ

: 316

Brass

Valves

Metric - BSP

Cylinders, Pumps & Motors

ags

Pneumatics

Gageports & Test Points

Custom Kits

Flange Adaptors

1700

Code 61
JIC Split Flange Adapter
1-MJ 2-FH61

1703

Code 61
JIC Split Flange Elbow
1-MJ 2-FH61

1704

Code 61
JIC Split Flange Elbow
1-MJ 2-FH61

FS-1700

Code 61
OFS Split Flange Adapter
1-OFS 2-FH61

FS-1703

Code 61
OFS Split Flange Elbow
1-OFS 2-FH61

FS-1704

Code 61
OFS Split Flange Elbow
1-OFS 2-FH61

610

Buna-N Flange O-Ring
Code 61 & 62

61SF

Split Flange Half
Code 61

61SF-KIT

Split Flange Kit
Code 61

The split flange halves never actually touch the the port surface. A clearance of 0.010" to 0.030" should always be measured after the torque values are reached. Only the flange head makes a metal-to-metal contact. Code 61 and Code 62 have different bolt patterns and are not interchangeable.

1800

Code 62
JIC Split Flange Adapter
1-MJ 2-FH62

1803

Code 62
JIC Split Flange Elbow
1-MJ 2-FH62

1804

Code 62
JIC Split Flange Elbow
1-MJ 2-FH62

FS-1800

Code 62
OFS Split Flange Adapter
1-OFS 2-FH62

FS-1803

Code 62
OFS Split Flange Elbow
1-OFS 2-FH62

FS-1804

Code 62
OFS Split Flange Elbow
1-OFS 2-FH62

610

Buna-N Flange O-Ring
Code 61 & 62

62SF

Split Flange Half
Code 62

62SF-KIT

Split Flange Kit
Code 62

37° JIC Fittings

SS-2403 • Stainless

2403 (070101)

Tube Union
1-MJ 2-MJ

SS-2403LH • Stainless

2403LH (070119)

Large Hex Union
1-MJ 2-MJ

SS-2404 • Stainless

2404 (070102)

Male Connector
1-MJ 2-MP

2404L

Male Connector Long
1-MJ 2-MP

SS-2405 • Stainless

2405 (070103)

Female Connector
1-MJ 2-FP

SS-2406 • Stainless

2406 (070123)

JIC Tube Reducer
1-FJ 2-MJ

2406R

Restrictor
JIC Tube Reducer
1-FJ 2-MJ

SS-2408 • Stainless

2408 (070109)

Tube Plug
1-MJ

SS-2500 • Stainless

2500 (070201)

Union Elbow
1-MJ 2-MJ

SS-2501 • Stainless

2501 (070202)

Male Elbow
1-MJ 2-MP

2501L (071502)

Male Elbow Long
1-MJ 2-MP

2501LL (071602)

Male Elbow Double Long
1-MJ 2-MP

SS-2502 • Stainless

2502 (070203)

Female Elbow
1-MJ 2-FP

SS-2503 • Stainless

2503 (070302)

Male Elbow
1-MJ 2-MP

SS-2503 • Stainless

2504

Union Elbow
1-MJ 2-MJ

2505

Female Elbow
1-MJ 2-FP

SS-2601 • Stainless

2601 (070425)

Male Branch Tee
1-MJ 2-MJ 3-MP

SS-2602 • Stainless

2602 (070427)

Female Branch Tee
1-MJ 2-MJ 3-FP

SS-2603 • Stainless

2603 (070401)

Union Tee
1-MJ 2-MJ 3-MJ

SS-2605 • Stainless

2605 (070424)

Male Run Tee
1-MJ 2-MP 3-MJ

SS-2606 • Stainless

2606 (070426)

Female Run Tee
1-MJ 2-FP 3-MJ

2650 (070501)

Union Cross
1, 2, 3, 4-MJ

Bulkhead Fittings

SS-2700LN • Stainless

2700LN (070601)

Bulkhead Union
& Locknut
1-MJ 2-BH MJ

SS-2701LN • Stainless

2701LN (070701)

Bulkhead Union
Elbow & Locknut
1-MJ 2-BH MJ

SS-2702LN • Stainless

2702LN (070801)

Bulkhead Union
Elbow & Locknut
1-MJ 2-BH MJ

SS-2703LN • Stainless

2703LN (070959)

Bulkhead Branch Tee
& Locknut
1-MJ 2-MJ 3-BH MJ

SS-2704LN • Stainless

2704LN (070858)

Bulkhead Run Tee
& Locknut
1-MJ 2-BH MJ 3-MJ

SS-2705LN • Stainless

2705LN

Female
Bulkhead Connector
& Locknut
1-FP 2-BH MJ

SS-2706LN • Stainless

2706LN

Male
Bulkhead Connector
& Locknut
1-MP 2-BH MJ

SS-306 • Stainless

306 (070118)

Bulkhead Locknut
(Use with #2700)

610 Claycraft Road, Columbus, OH 43230
(P) 614.863.6930 • (F) 614.864.1327
(W) PressureConnections.com

Your Quality Connection

ISO 9001 : 2000

Flareless Fittings

C-318 (080110)

Flareless Nut

C-319 (080115)

Flareless Ferrule

SS-C-2403 • Stainless

C-2403 (080101)

Flareless Union
1-FL 2-FL

SS-C-2404 • Stainless

C-2404 (080102)

Flareless Male Connector 1-FL 2-MP

SS-C-2501 • Stainless

C-2501 (080202)

Flareless Male Elbow
1-FL 2-MP

SS-C-2603 • Stainless

C-2603 (080401)

Flareless Union Tee
1-FL 2-FL 3-FL

SS-C-2605 • Stainless

C-2605 (080424)

Flareless Run Tee
1-FL 2-MP 3-FL

SS-C-6400 • Stainless

C-6400 (080120)

Flareless
Straight Thread
Connector 1-FL 2-MB

SS-C-6600 • Stainless

C-6600 (080433)

Flareless
Swivel Nut Branch
Tee 1-FL 2-FL 3-FFX

SS-C-6801 • Stainless

C-6801 (080220)

Flareless
Straight Thread
Elbow 1-FL 2-MB

Flareless Fittings come assembled with the required Nuts and Ferrules,
and are interchangable with Parker ***Ferulok*** and Weatherhead ***Ermeto*** Styles.

Beaded Hose Barbs

4404 (430160)

Beaded Hose Barb x MP
1-HS 2-MP

4501 (430280)

Beaded Hose Barb x MP
1-HS 2-MP

4503

Beaded Hose Barb x MP
1-HS 2-MP

4601 (430292)

Beaded Hose Barb x MB
1-HS 2-MB

4603 (430392)

Beaded Hose Barb x MB
1-HS 2-MB

4604 (430192)

Beaded Hose Barb x MB
1-HS 2-MB

4800CF

100R4
Crimp Ferrule

Worm Clamp

Worm Gear Clamp

Suction Hose Barbs

4800CF

100R4
Crimp Ferrule

4801

100R4
Hose Barb x MP
1-HS 2-MP

4803

100R4
Hose Barb x MJ
1-HS 2-MJ

4806

100R4
Hose Barb x FJX
1-HS 2-FJX

4815

100R4
Hose Barb x Code 61 Flange
1-HS 2-FH61

4817

100R4
Hose Barb x Code 61 Flange
1-HS 2-FH61

4819

100R4
Hose Barb x Code 61 Flange
1-HS 2-FH61

Worm Clamp

Worm Gear Clamp

SAE 100R4 Suction Hose / Return Line

Brass Barbs and Push-Lock Hose

SS-272 • Stainless

272

Male Pipe
1-HS 2-MP

27290

Male Pipe Elbow
1-HS 2-MP

273

Male Pipe Swivel
1-HS 2-MPX

274

Female Pipe
1-HS 2-FP

278

Female Pipe Swivel
1-HS 2-FPX (ball seat)

280

Female Pipe Swivel
1-HS 2-FPX (gasket seat)

282

Male SAE Flare
1-HS 2-MS

284

Female SAE Swivel
1-HS 2-FSX

286

Male JIC Flare
1-HS 2-MJ

SS-287 • Stainless

287

Female JIC/SAE Swivel
1-HS 2-FJX/FSX (dual seat)

SS-288 • Stainless

288

Female JIC Swivel
1-HS 2-FJX

290

Male
Inverted Flare Swivel
1-HS 2-MIX

292

Female Inverted Flare
1-HS 2-FI

294

Rigid Tube Shank
1-HS 2-RTS

SS-296 • Stainless

296

Hose Splicer
1-HS 2-HS

- ***300-Grip*** Push-Lock Hose
- Thermoid ***Flex-Loc®250*** Push-Lock Hose